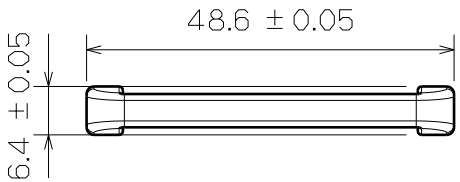

Top View

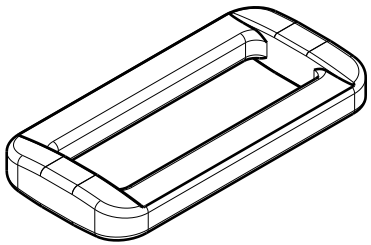

3D View

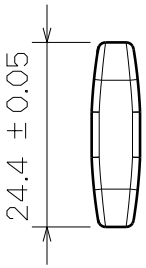

Right View

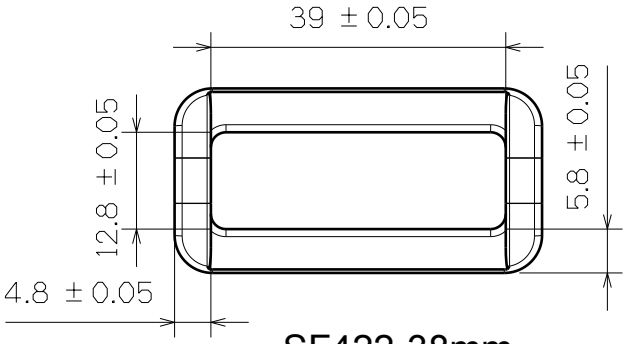

SF422-38mm

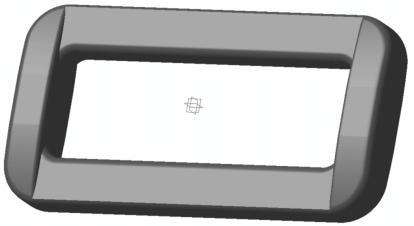

This drawing is our property.
It can't be reproduced
or communicated without
our written agreement.

SHIN FANG PLASTIC INDUSTRIAL CO., LTD.

DRAWN BY DANIEL CHEN	DATE 1999/2/5	DRAWING TITLE SQUARE LOOP			
CHECKED BY JIMMY CHEN	DATE 1999/2/7	SIZE A4	DRAWING NUMBER SF422-38MM		REV X
DESIGNED BY RD	DATE 1999/2	SCALE 1:1	MATERIAL POM	SHEET 1/1	